State of Utah

SPENCER J. COX
Governor

DEIDRE HENDERSON
Lieutenant Governor

Department of
Environmental Quality

Kimberly D. Shelley
Executive Director

DIVISION OF WATER QUALITY
John K. Mackey, P.E.
Director

July 1st, 2024

VIA EMAIL
READ RECEIPT

ATTN: Christopher Butler
VPC Global
28305 Livingston Avenue
Valencia, California 91355

Subject: Valencia Pipe Company 1,000 and 1,500 Gallon Septic Tank Approval

Dear Mr. Butler,

The Division of Water Quality (Division) has completed its review of plans[1] for the Valencia Pipe Company 1,000 and 1,500 gallon single and dual-compartment high-density polyethylene (HDPE) septic tanks received on May 23, 2024. These plans and specifications basically comply with septic tank construction requirements listed in Utah Administrative Code R317-4-14, Appendix A and are hereby approved. The Division has retained construction plans and specifications in our files for future reference. A *List of Approved Septic Tanks and Manufacturers* is distributed to local health departments periodically and is available to the public online at https://documents.deq.utah.gov/water-quality/engineering/DWQ-2017-003211.pdf.

Any modifications to approved plans, specifications, or construction methods must be reviewed and receive proper approval by the Division for conformance to applicable rules and incorporation on the *List of Approved Septic Tanks and Manufacturers*.

Please contact Robert Beers of my staff at (385) 501-9580 or rbeers@utah.gov if you have any questions or concerns regarding this matter.

[1] DWQ-2024-004513. A related document, including an installation manual with specifications is (DWQ-2024-004514).

Sincerely,

John K. Mackey, PE
Director

JKM:RB:cl

Enclosure: Valencia Pipe Co 1000 & 1500 gal (1 & 2 comp) Septic Tank Approval Letter
Valencia Pipe Co 1000 & 1500 gal HDPE Septic Tank Plans 23May2024

Cc: Via Email
Robert Beers, Division of Water Quality
Ken Hoffman, Division of Water Quality

File: P:\WQ\DWQDatabases\SepticTanks\Septic Tank Documents\Valencia Pipe Company
DWQ-2024-004515

DWQ-2024-004513

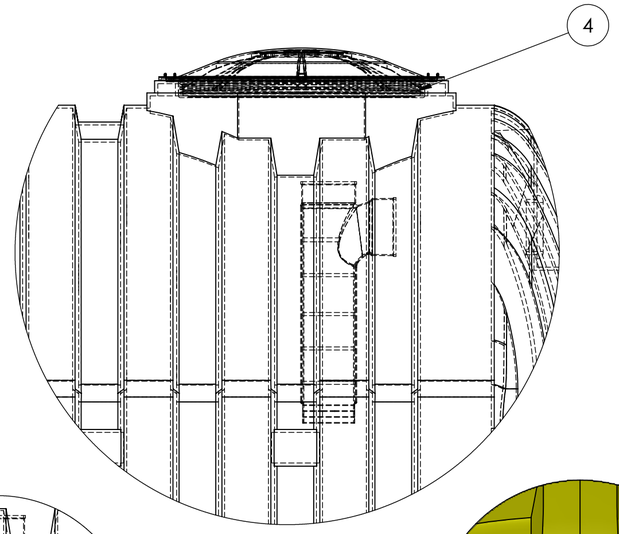

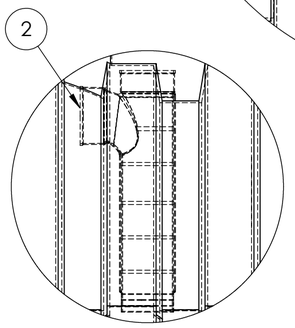

DETAIL T
SCALE 1 : 9

DETAIL H
SCALE 1 : 9

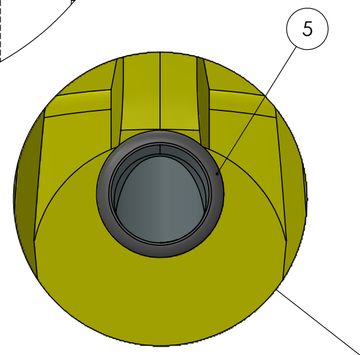

DETAIL R
SCALE 1 : 4.5

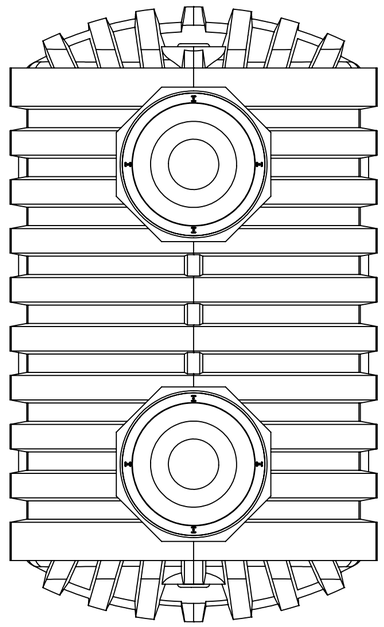

TOP VIEW

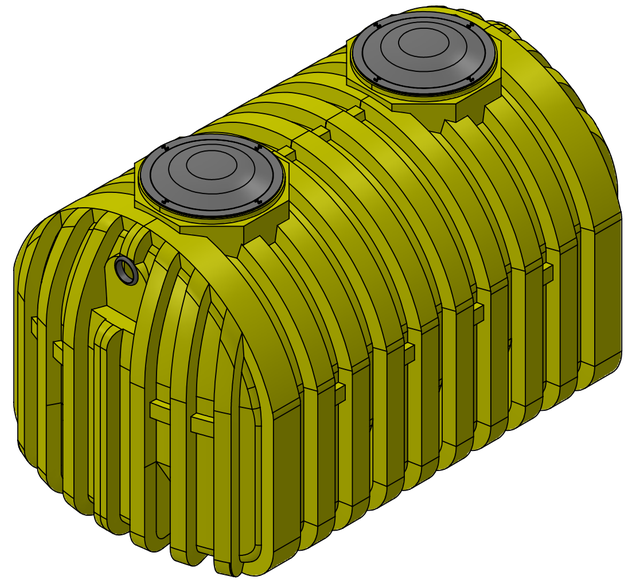

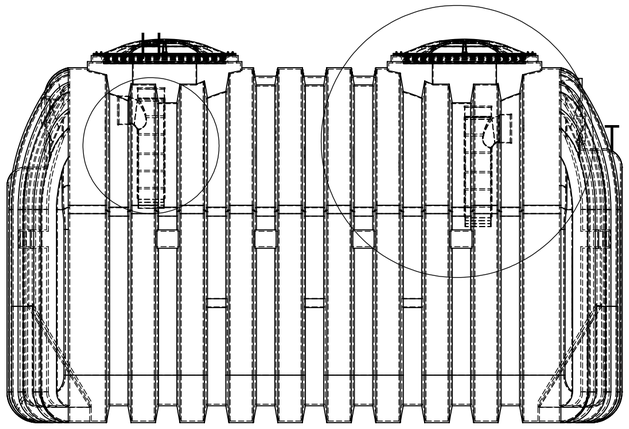

SIDE VIEW

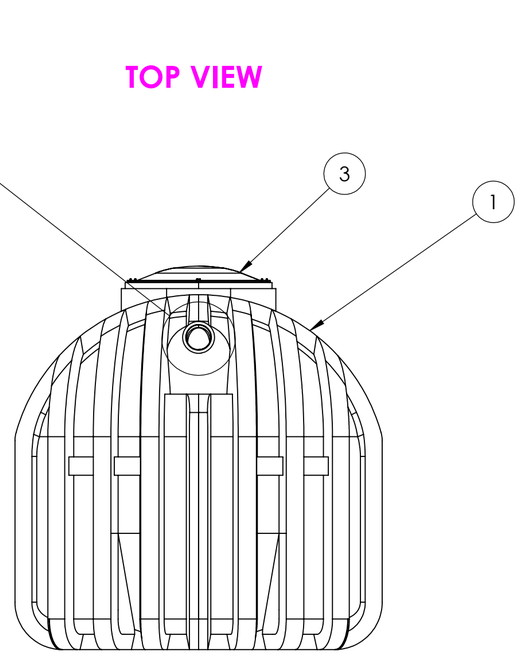

FRONT VIEW

ITEM #	MFGR PART #	DESCRIPTION	QTY
1	87-41718	1000g 1C HDPE Septic Tank	1
2	SPL-BR-004	4 Inch Inlet/Outlet Tee	2
3	85-SPL-001-L	20" Black Domed Lid; SS Screws	2
4	WTL-001-FM	Tank Adapter Ring	2
5	85-SPL-ER-G	4 Inch Gasket	2

Complies with FDA standards 21 CFR 177.1520 (1) 3.1 and 3.2
3 year limited warranty

Municipal and County codes may vary from your state approval. Please make sure you consult with your local sanitation department or plumber on requirements.

UV resistant BPA Free HDPE
Empty weight: 311
Shipping Class: 300
Includes 2 4" tees and gaskets

VPC
VALENCIA PIPE COMPANY

UNLESS OTHERWISE SPECIFIED:
DIMENSIONS ARE IN MILLIMETERS
SURFACE FINISH:
TOLERANCES:
LINEAR:
ANGULAR:

FINISH:

DEBURR AND BREAK SHARP EDGES

DO NOT SCALE DRAWING | REVISION

	NAME	SIGNATURE	DATE
DRAWN			
CHK'D			
APPV'D			
MFG			
Q.A			

MATERIAL:

WEIGHT:

TITLE:
87-41718 1000 GALLON ONE COMPARTMENT HDPE SEPTIC TANK

DWG NO. A2

SCALE:1:18 | SHEET 1 OF 7

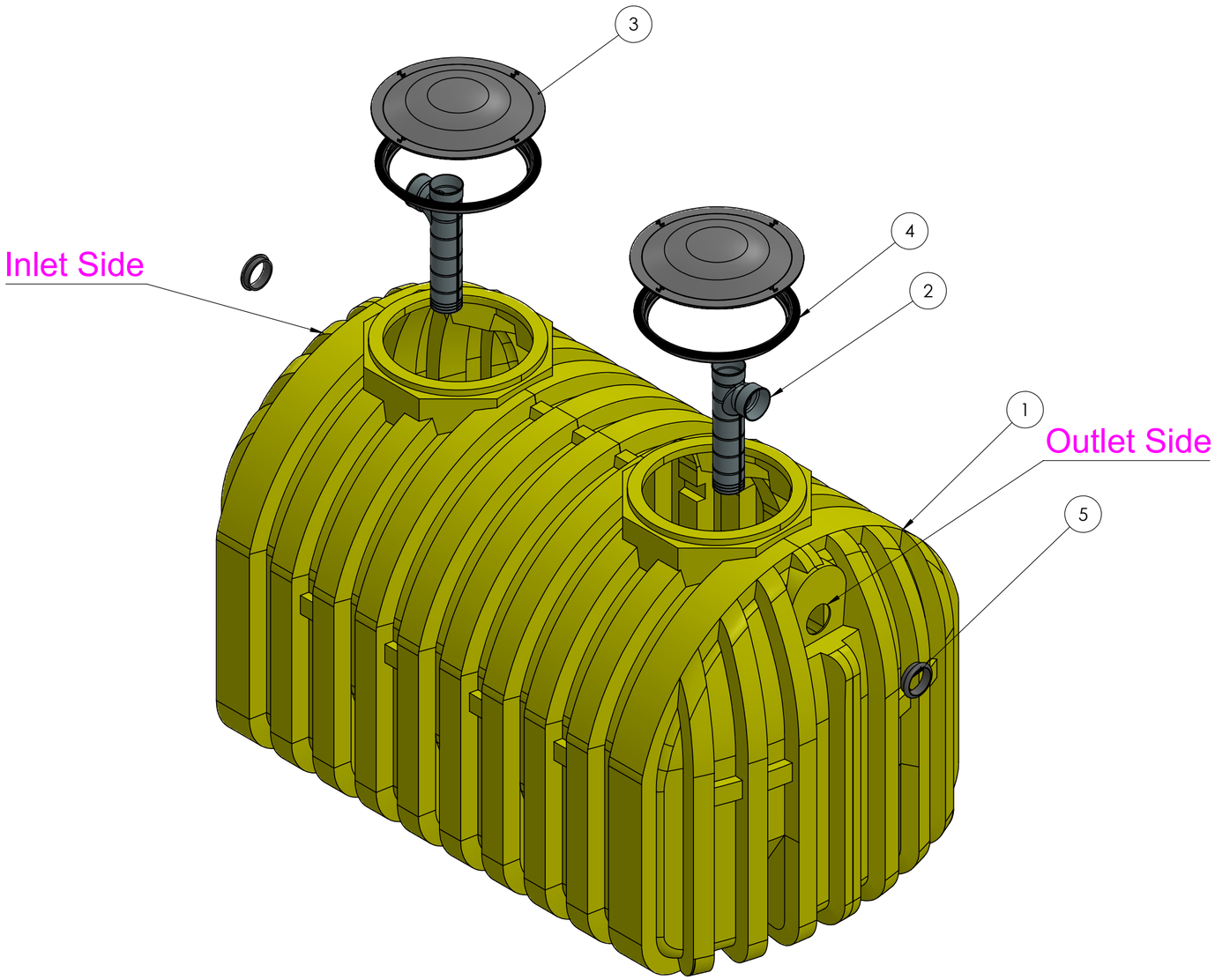

Exploded View

ITEM #	MFGR PART #	DESCRIPTION	QTY
1	87-41718	1000g 1C HDPE Septic Tank	1
2	SPL-BR-004	4 Inch Inlet/Outlet Tee	2
3	85-SPL-001-L	20" Black Domed Lid; SS Screws	2
4	WTL-001-FM	Tank Adapter Ring	2
5	85-SPL-ER-G	4 Inch Gasket	2

Complies with FDA standards 21 CFR 177.1520 (1) 3.1 and 3.2
3 year limited warranty

Municipal and County codes may vary from your state approval. Please make sure you consult with your local sanitation department or plumber on requirements.

UV resistant BPA Free HDPE
Empty weight: 311
Shipping Class: 300
Includes 2 4" tees and gaskets

VPC
VALENCIA PIPE COMPANY

UNLESS OTHERWISE SPECIFIED:
DIMENSIONS ARE IN MILLIMETERS
SURFACE FINISH:
TOLERANCES:
LINEAR:
ANGULAR:

FINISH:

DEBURR AND BREAK SHARP EDGES

DO NOT SCALE DRAWING | REVISION

	NAME	SIGNATURE	DATE
DRAWN			
CHK'D			
APPV'D			
MFG			
Q.A			

MATERIAL:

WEIGHT:

TITLE:
87-41718 1000 GALLON ONE COMPARTMENT HDPE SEPTIC TANK

DWG NO. A2

SCALE:1:13 SHEET 2 OF 7

STATE OF NEW YORK · TYSHIA IBRAHIM · 098232 · LICENSED PROFESSIONAL ENGINEER

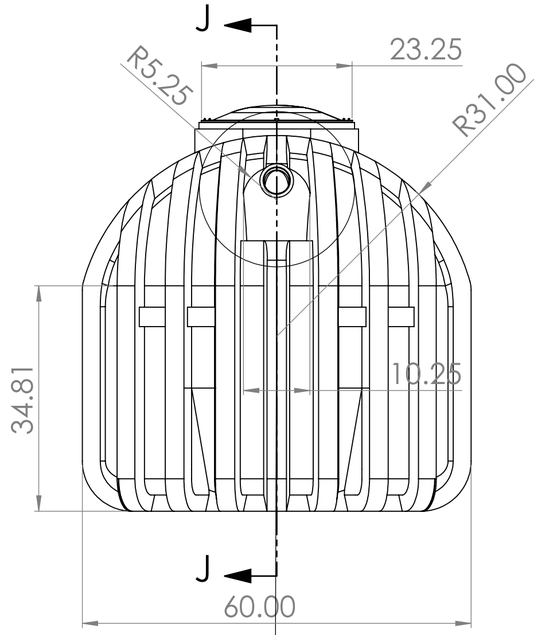

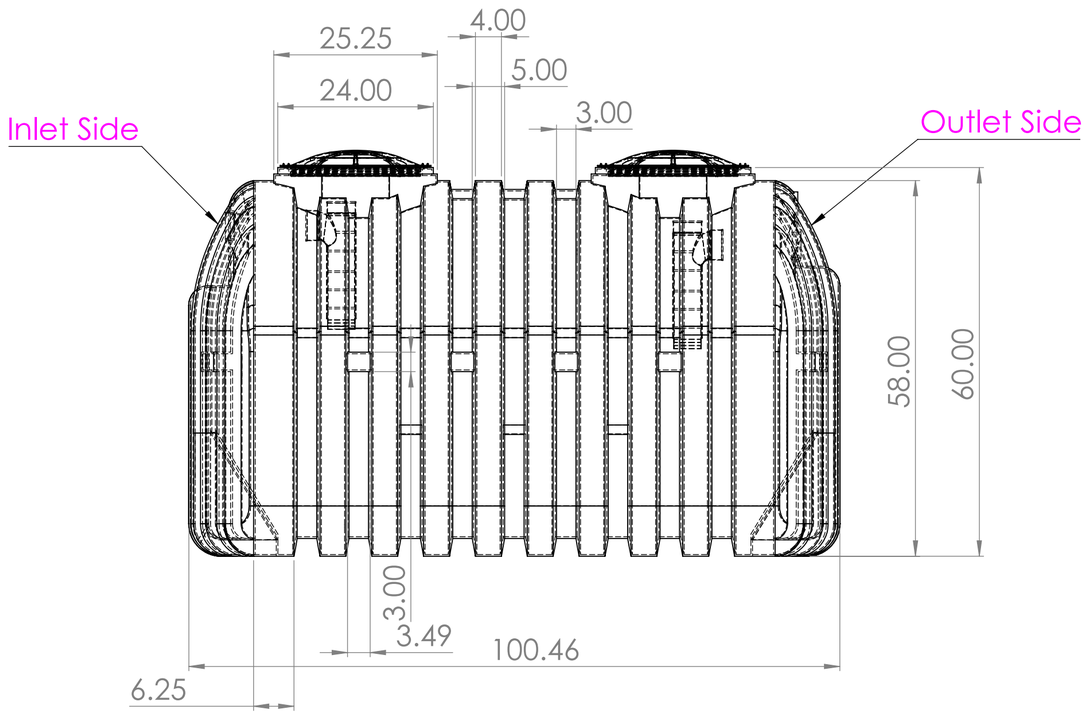

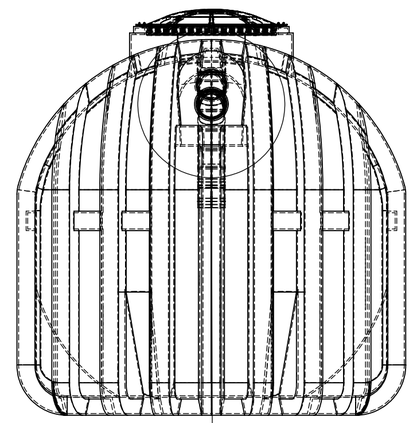

DETAIL W
SCALE 2 : 17

4 " Gasket
(Inlet Side)

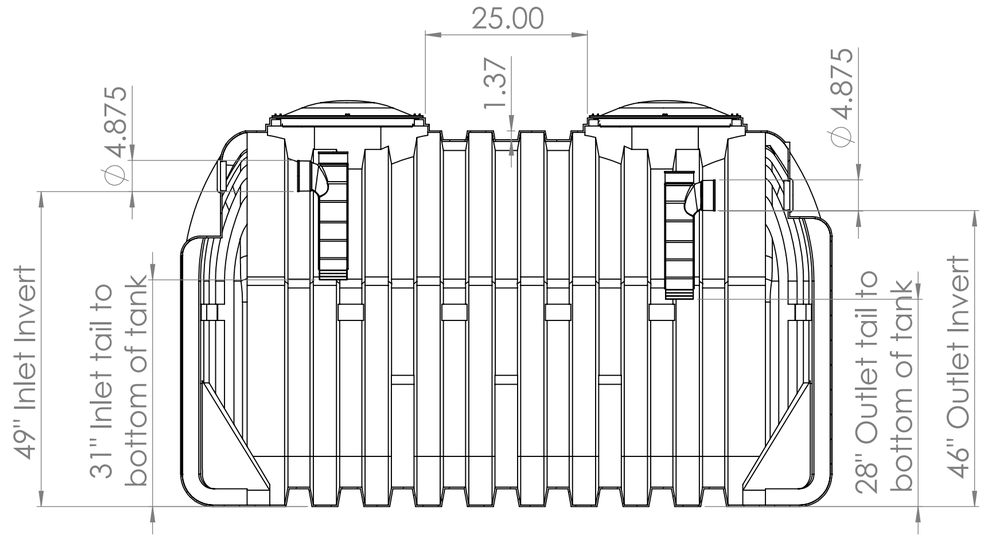

SECTION J-J
SCALE 1 : 17

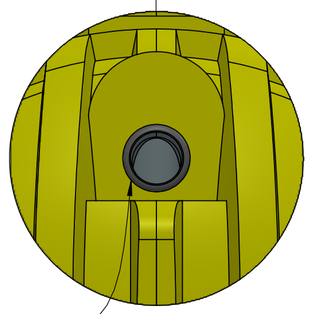

DETAIL AA
SCALE 2 : 17

4 " Gasket
(Outlet Side)

Complies with FDA standards 21 CFR 177.1520 (1) 3.1 and 3.2
3 year limited warranty

Municipal and County codes may vary from your state approval. Please make sure you consult with your local sanitation department or plumber on requirements.

UV resistant BPA Free HDPE
Empty weight: 311
Shipping Class: 300
Includes 2 4" tees and gaskets

VALENCIA PIPE COMPANY

UNLESS OTHERWISE SPECIFIED: DIMENSIONS ARE IN MILLIMETERS SURFACE FINISH: TOLERANCES: LINEAR: ANGULAR:	FINISH:		DEBURR AND BREAK SHARP EDGES	DO NOT SCALE DRAWING	REVISION
	NAME	SIGNATURE	DATE	TITLE: 87-41718 1000 GALLON ONE COMPARTMENT HDPE SEPTIC TANK	
DRAWN					
CHK'D					
APPV'D					
MFG					
Q.A					
MATERIAL				DWG NO.	A2
WEIGHT:				SCALE:1:18	SHEET 3 OF 7

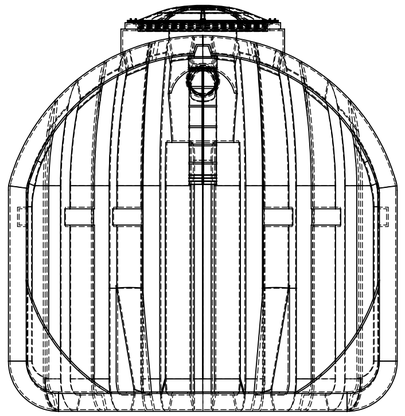

SECTION N-N
SCALE 1 : 17
Inlet side

SECTION B-B
SCALE 1 : 17

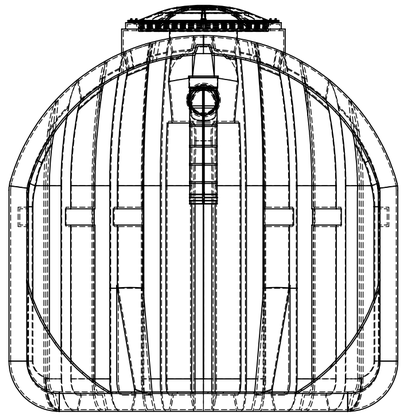

SECTION P-P
SCALE 1 : 17
Outlet side

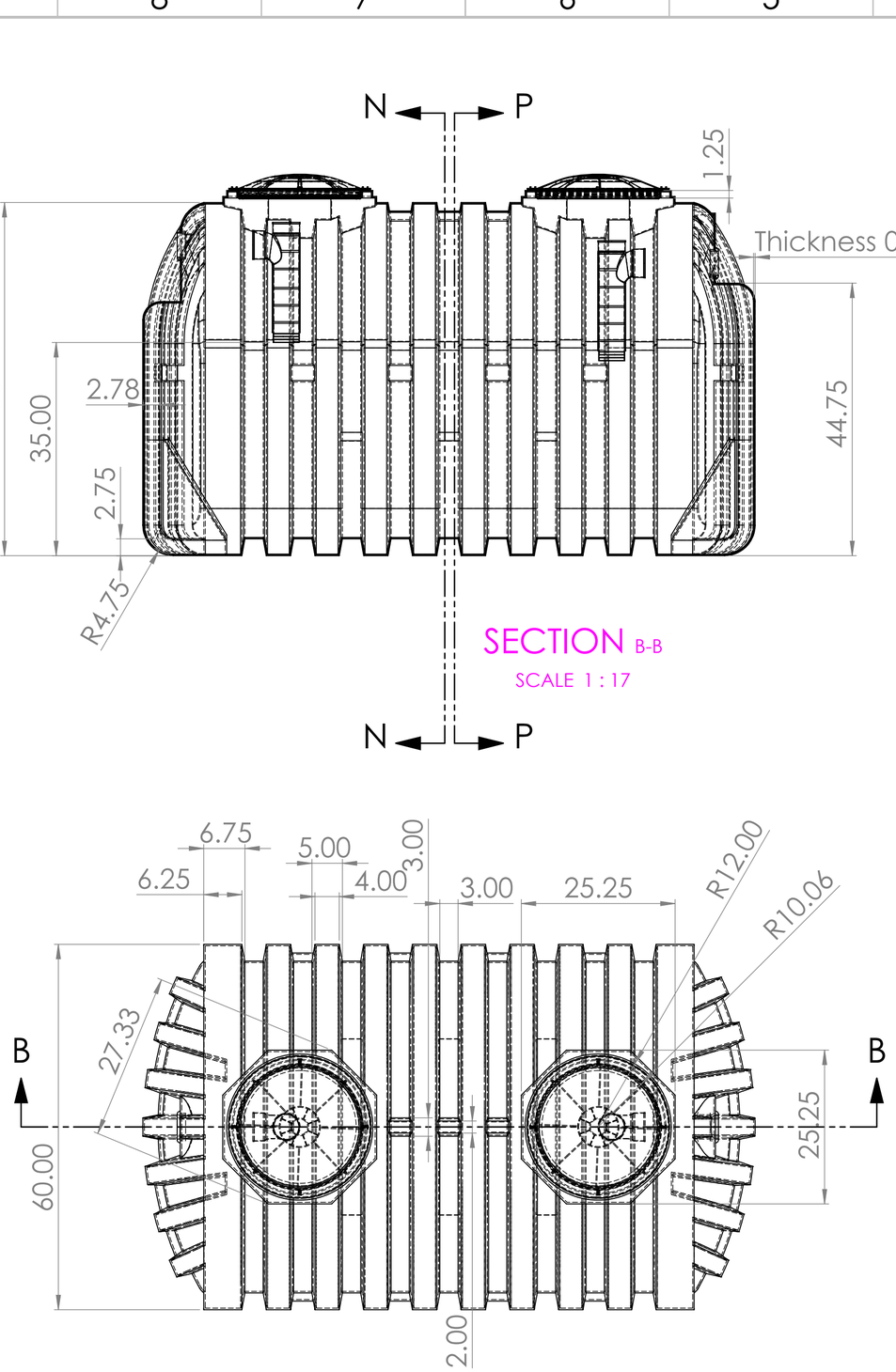

Complies with FDA standards 21 CFR 177.1520 (1) 3.1 and 3.2
3 year limited warranty

Municipal and County codes may vary from your state approval. Please make sure you consult with your local sanitation department or plumber on requirements.

UV resistant BPA Free HDPE
Empty weight: 311
Shipping Class: 300
Includes 2 4" tees and gaskets

VALENCIA PIPE COMPANY

UNLESS OTHERWISE SPECIFIED: DIMENSIONS ARE IN MILLIMETERS SURFACE FINISH: TOLERANCES: LINEAR: ANGULAR:		FINISH:		DEBURR AND BREAK SHARP EDGES	DO NOT SCALE DRAWING / REVISION
	NAME	SIGNATURE	DATE		TITLE: 87-41718 1000 GALLON ONE COMPARTMENT HDPE SEPTIC TANK
DRAWN					
CHK'D					
APPV'D					
MFG					
Q.A					
MATERIAL:					DWG NO. A2
WEIGHT:					SCALE:1:18 / SHEET 4 OF 7

STATE OF NEW YORK · LICENSED PROFESSIONAL ENGINEER · 098232

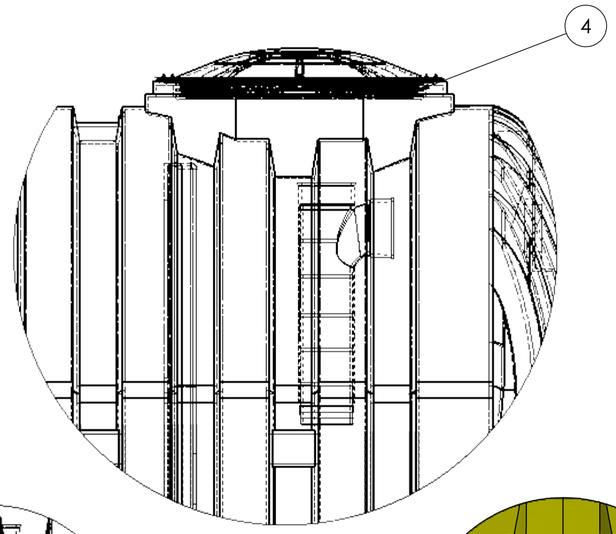

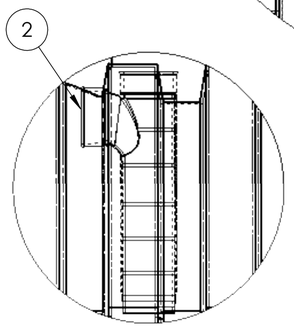

DETAIL T
SCALE 1 : 9

DETAIL H
SCALE 1 : 9

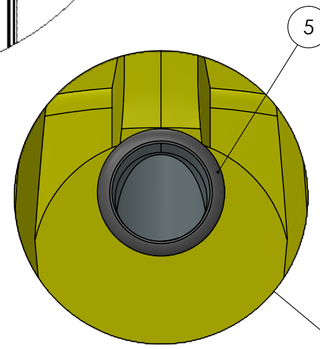

DETAIL R
SCALE 1 : 4.5

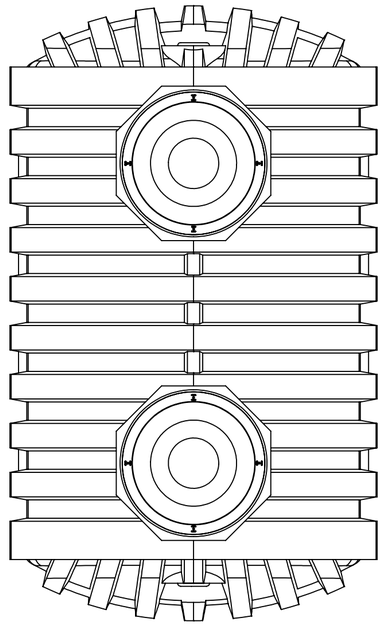

TOP VIEW

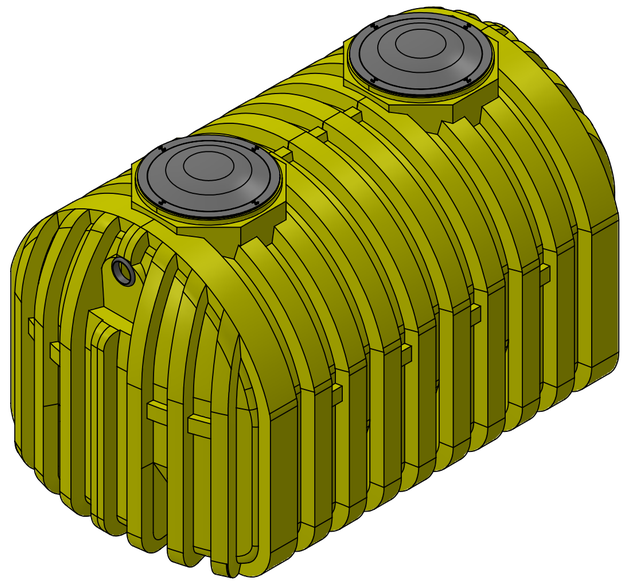

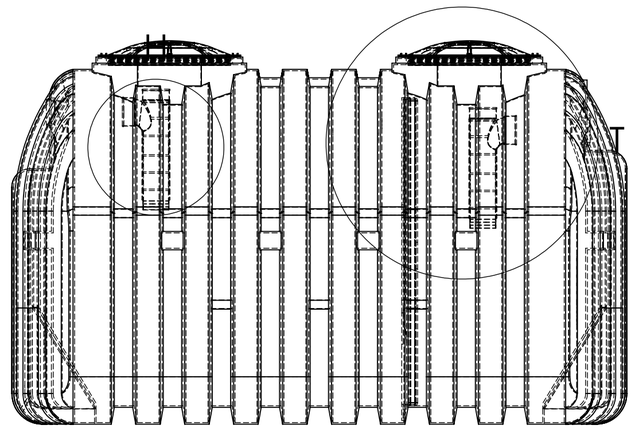

VIEW

FRONT VIEW

ITEM #	MFGR PART #	DESCRIPTION	QTY
1	87-41720	1000g 2C HDPE Septic Tank	1
2	SPL-BR-004	4 Inch Inlet/Outlet Tee	2
3	85-SPL-001-L	20" Black Domed Lid; SS Screws	2
4	WTL-001-FM	Tank Adapter Ring	2
5	85-SPL-ER-G	4 Inch Gasket	2

Operating Volume (Glns)
Primary Compartment: 670
Secondary Compartment: 330

Complies with FDA standards 21 CFR 177.1520 (1) 3.1 and 3.2
3 year limited warranty

Municipal and County codes may vary from your state approval. Please make sure you consult with your local sanitation department or plumber on requirements.

UV resistant BPA Free HDPE
Empty weight: 311
Shipping Class: 300
Includes 2 4" tees and gaskets

VALENCIA PIPE COMPANY

UNLESS OTHERWISE SPECIFIED: DIMENSIONS ARE IN MILLIMETERS SURFACE FINISH: TOLERANCES: LINEAR: ANGULAR:	FINISH:	DEBURR AND BREAK SHARP EDGES	DO NOT SCALE DRAWING	REVISION

	NAME	SIGNATURE	DATE
DRAWN			
CHK'D			
APPV'D			
MFG			
Q.A			

STATE OF NEW YORK · EYYOUB IBRAHIM · 098232 · LICENSED PROFESSIONAL ENGINEER

MATERIAL:
WEIGHT:

TITLE: 87-41720 1000 GALLON TWO COMPARTMENT HDPE SEPTIC TANK

DWG NO.
A2

SCALE:1:18
SHEET 1 OF 7

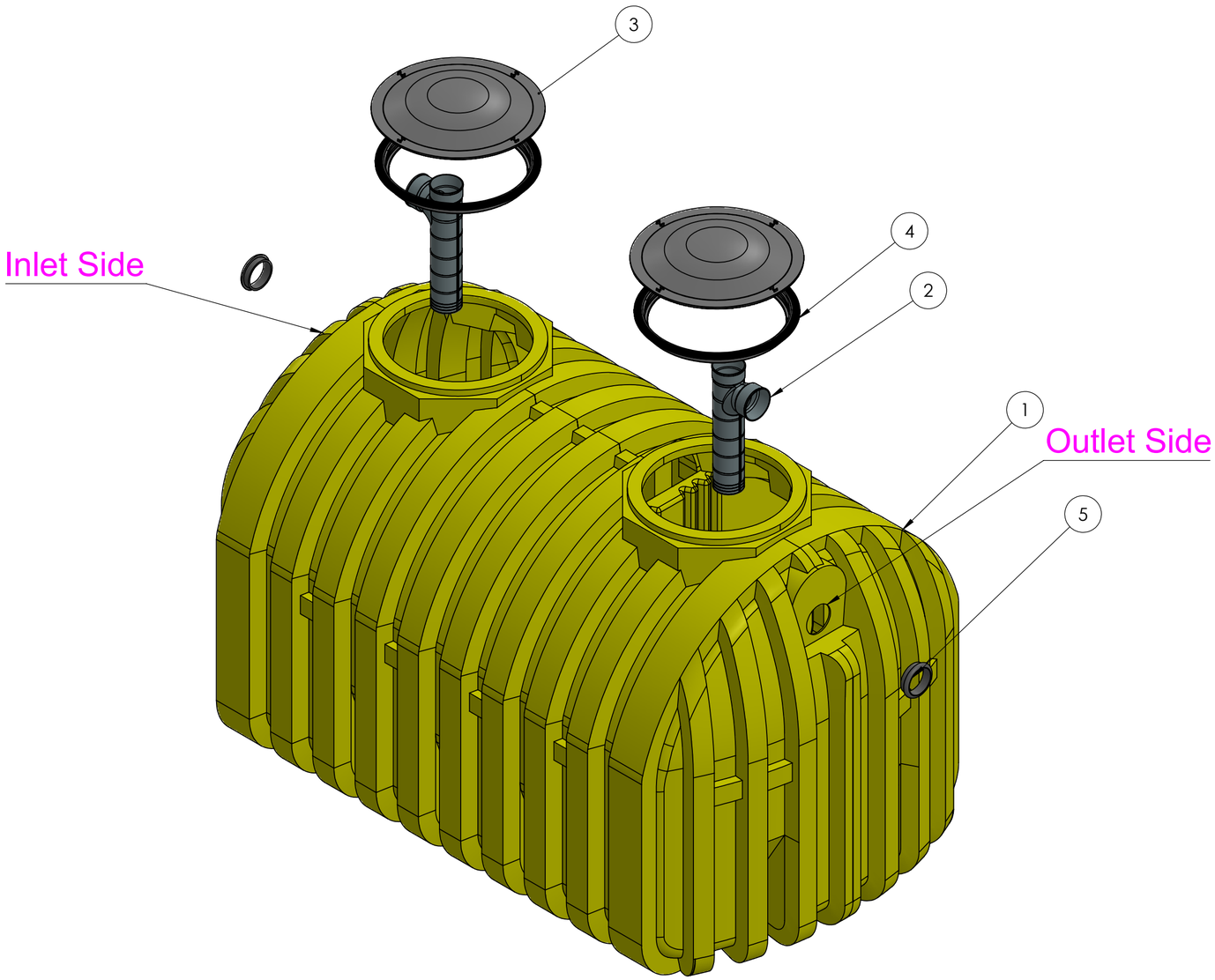

Exploded View

ITEM #	MFGR PART #	DESCRIPTION	QTY
1	87-41720	1000g 2C HDPE Septic Tank	1
2	SPL-BR-004	4 Inch Inlet/Outlet Tee	2
3	85-SPL-001-L	20" Black Domed Lid; SS Screws	2
4	WTL-001-FM	Tank Adapter Ring	2
5	85-SPL-ER-G	4 Inch Gasket	2

Operating Volume (Glns)
Primary Compartment: 670
Secondary Compartment: 330

Complies with FDA standards 21 CFR 177.1520 (1) 3.1 and 3.2
3 year limited warranty

Municipal and County codes may vary from your state approval. Please make sure you consult with your local sanitation department or plumber on requirements.

UV resistant BPA Free HDPE
Empty weight: 311
Shipping Class: 300
Includes 2 4" tees and gaskets

VPC
VALENCIA PIPE COMPANY

UNLESS OTHERWISE SPECIFIED:
DIMENSIONS ARE IN MILLIMETERS
SURFACE FINISH:
TOLERANCES:
LINEAR:
ANGULAR:

FINISH:

DEBURR AND BREAK SHARP EDGES

DO NOT SCALE DRAWING | REVISION

	NAME	SIGNATURE	DATE
DRAWN			
CHK'D			
APPV'D			
MFG			
Q.A			

MATERIAL:

WEIGHT:

STATE OF NEW YORK
VICTORIA IRELAND
098232
LICENSED PROFESSIONAL ENGINEER

TITLE:
87-41720 1000 GALLON TWO COMPARTMENT HDPE SEPTIC TANK

DWG NO. | A2

SCALE:1:13 | SHEET 2 OF 7

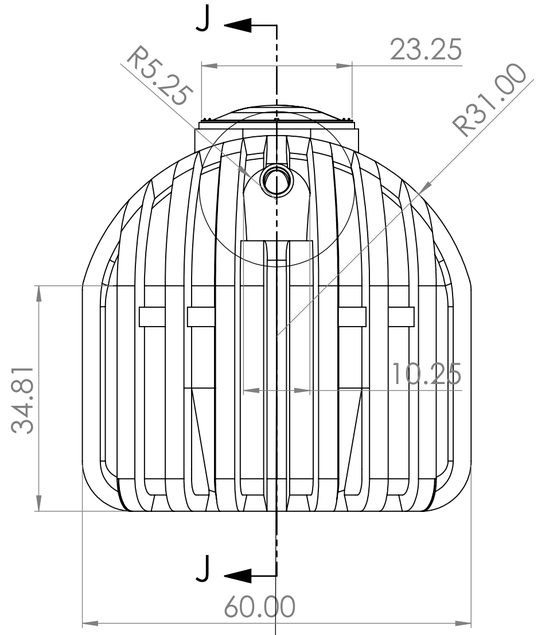

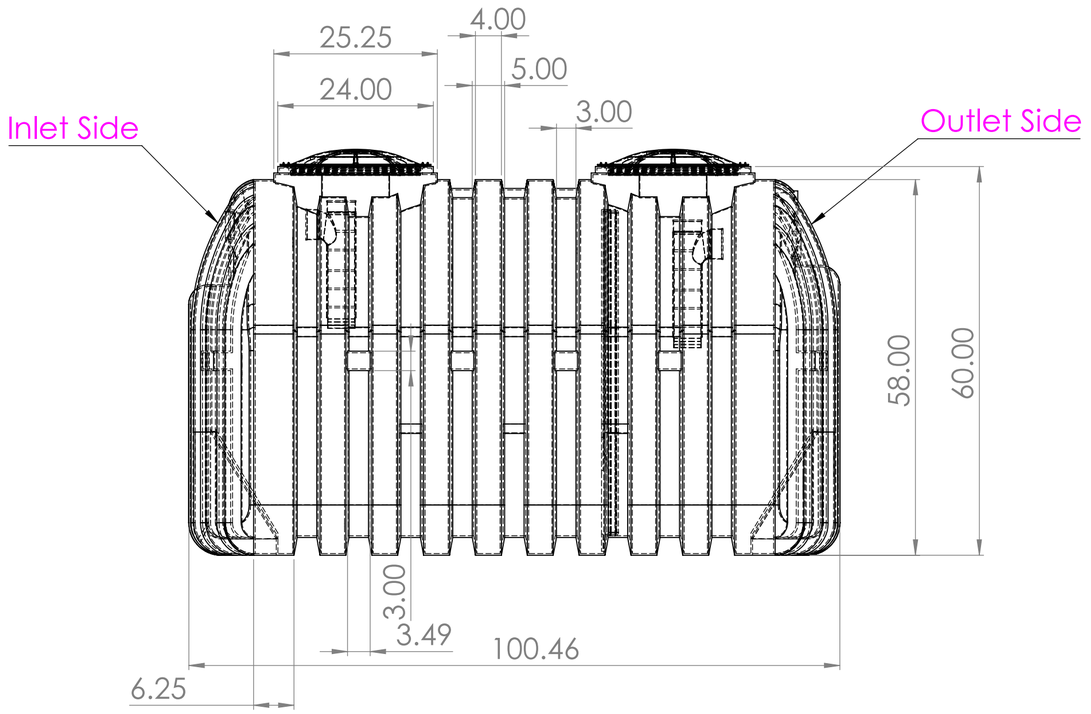

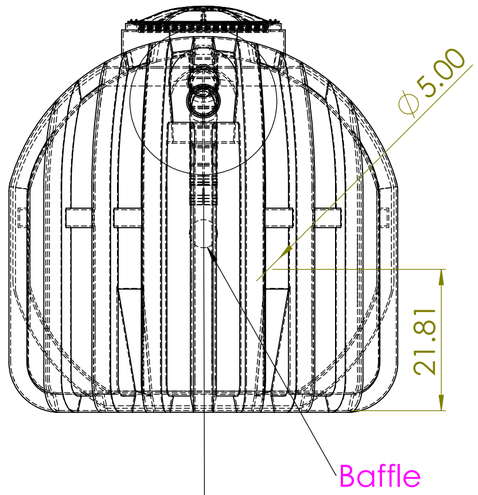

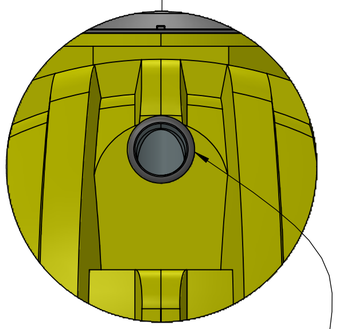

DETAIL W
SCALE 2 : 17

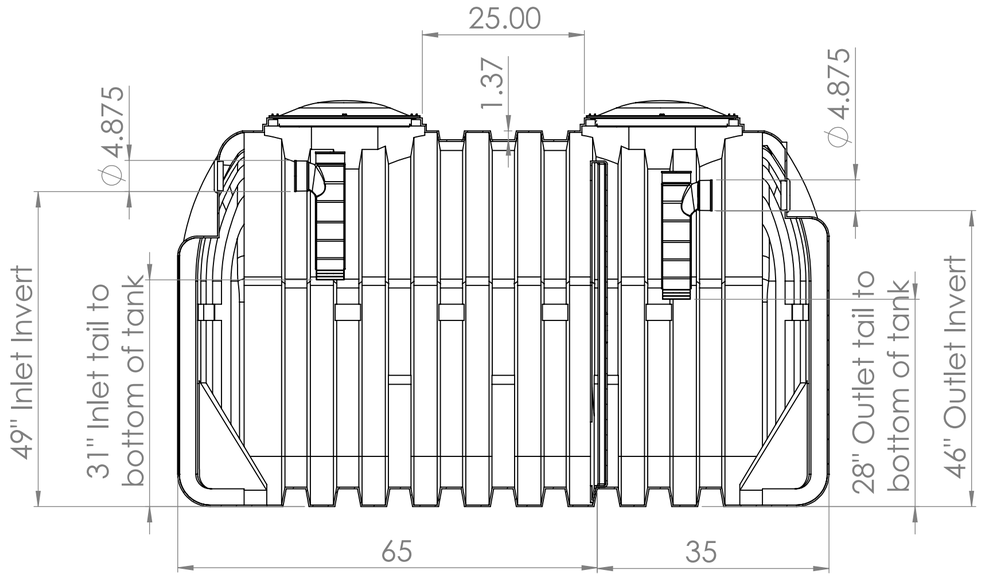

SECTION J-J
SCALE 1 : 17

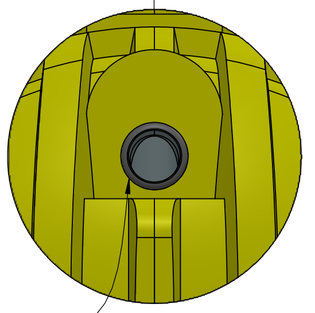

DETAIL AA
SCALE 2 : 17

4 " Gasket
(Inlet Side)

4 " Gasket
(Outlet Side)

Operating Volume (Glns)
Primary Compartment: 670
Secondary Compartment: 330

Complies with FDA standards 21 CFR 177.1520 (1) 3.1 and 3.2
3 year limited warranty

Municipal and County codes may vary from your state approval. Please make sure you consult with your local sanitation department or plumber on requirements.

UV resistant BPA Free HDPE
Empty weight: 311
Shipping Class: 300
Includes 2 4" tees and gaskets

VPC
VALENCIA PIPE COMPANY

UNLESS OTHERWISE SPECIFIED: DIMENSIONS ARE IN MILLIMETERS SURFACE FINISH: TOLERANCES: LINEAR: ANGULAR:	FINISH:		DEBURR AND BREAK SHARP EDGES	DO NOT SCALE DRAWING	REVISION
	NAME	SIGNATURE	DATE	TITLE: 87-41720 1000 GALLON TWO COMPARTMENT HDPE SEPTIC TANK	
DRAWN					
CHK'D					
APPV'D					
MFG					
Q.A					
MATERIAL				DWG NO.	A2
WEIGHT:				SCALE:1:17	SHEET 3 OF 7

STATE OF NEW YORK
JOSHUA IRWIN
098232
LICENSED PROFESSIONAL ENGINEER

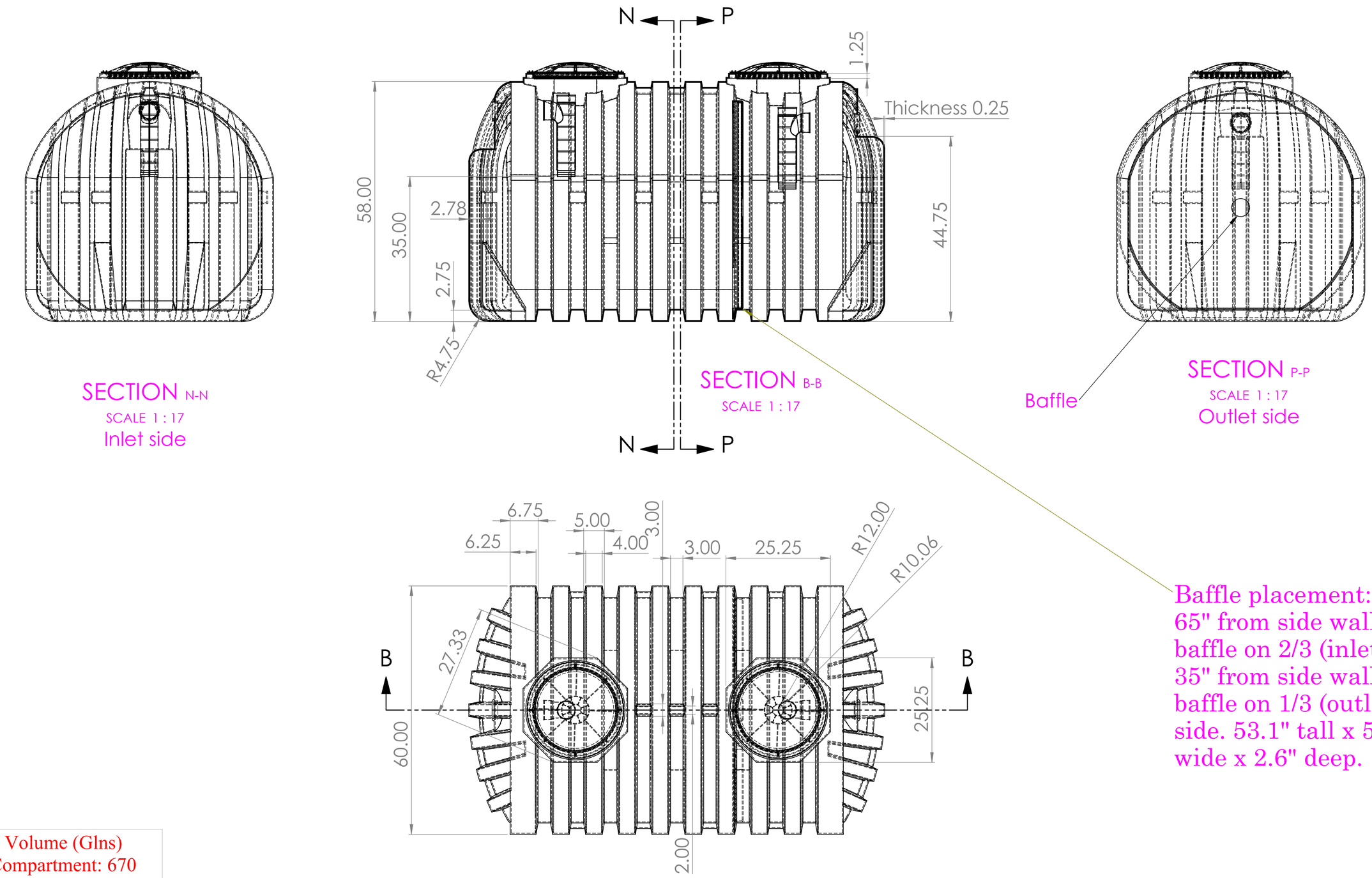

Baffle placement:
65" from side wall to baffle on 2/3 (inlet) side; 35" from side wall to baffle on 1/3 (outlet) side. 53.1" tall x 59.3" wide x 2.6" deep.

Operating Volume (Glns)
Primary Compartment: 670
Secondary Compartment: 330

Complies with FDA standards 21 CFR 177.1520 (1) 3.1 and 3.2
3 year limited warranty

Municipal and County codes may vary from your state approval. Please make sure you consult with your local sanitation department or plumber on requirements.

UV resistant BPA Free HDPE
Empty weight: 311
Shipping Class: 300
Includes 2 4" tees and gaskets

VALENCIA PIPE COMPANY

UNLESS OTHERWISE SPECIFIED: DIMENSIONS ARE IN MILLIMETERS SURFACE FINISH: TOLERANCES: LINEAR: ANGULAR:	FINISH:		DEBURR AND BREAK SHARP EDGES	DO NOT SCALE DRAWING	REVISION
	NAME	SIGNATURE	DATE	TITLE: 87-41720 1000 GALLON TWO COMPARTMENT HDPE SEPTIC TANK	
DRAWN					
CHK'D					
APPV'D					
MFG					
Q.A				MATERIAL	DWG NO. A2
				WEIGHT:	SCALE:1:17 SHEET 4 OF 7

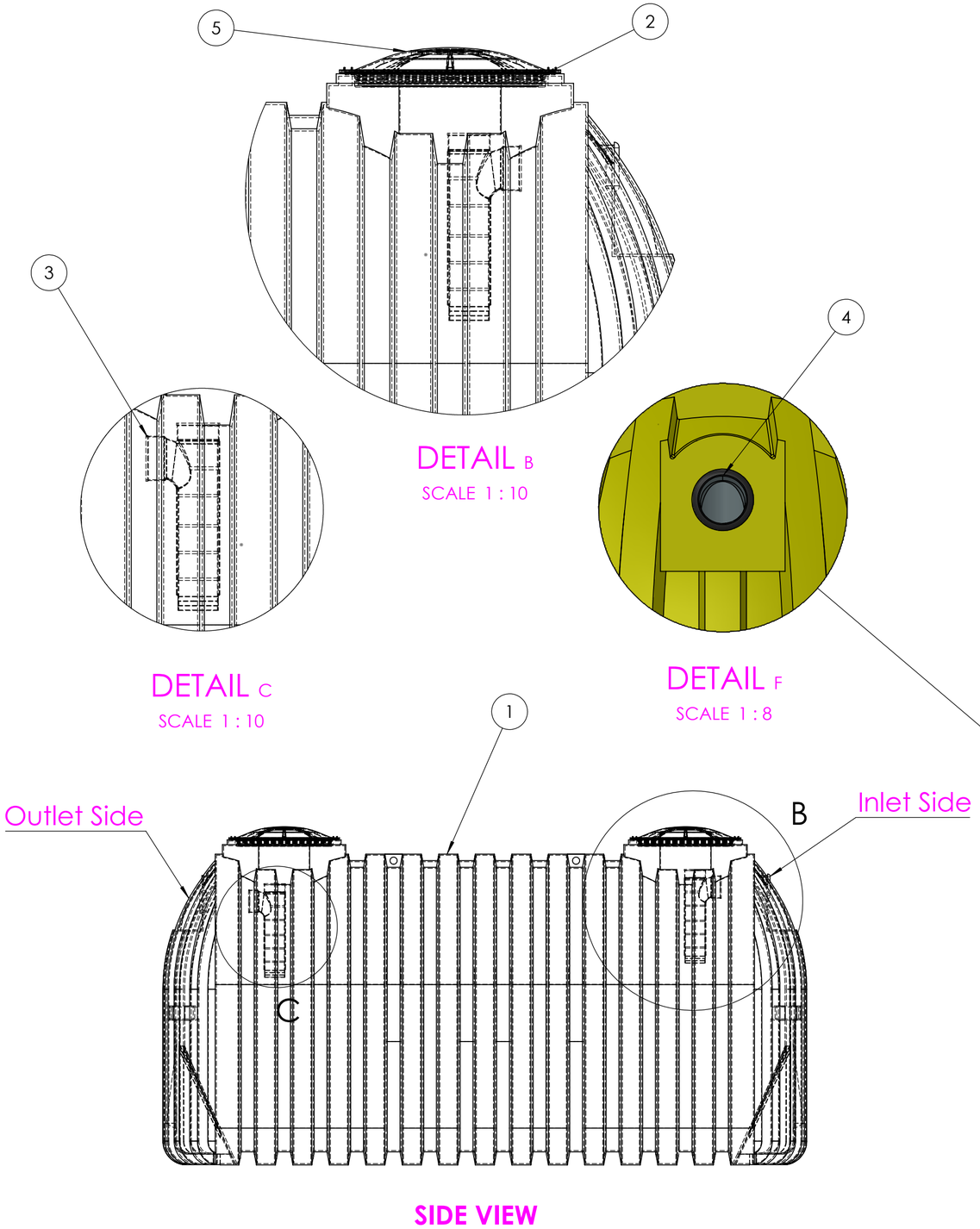

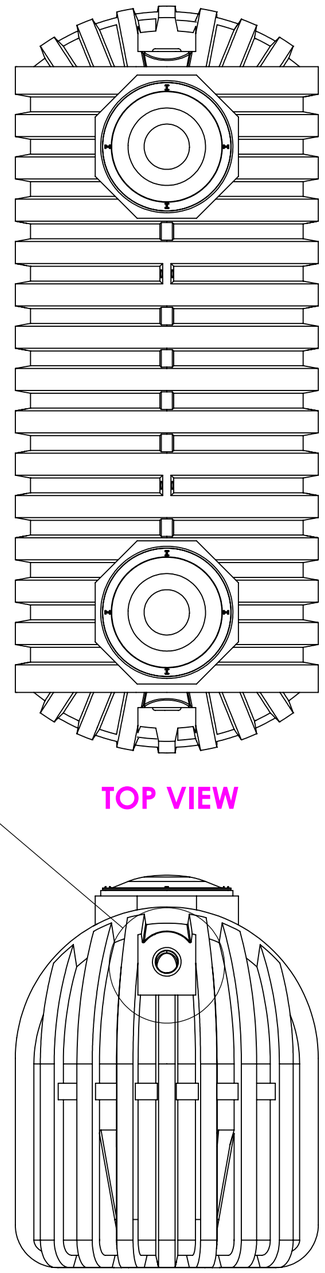

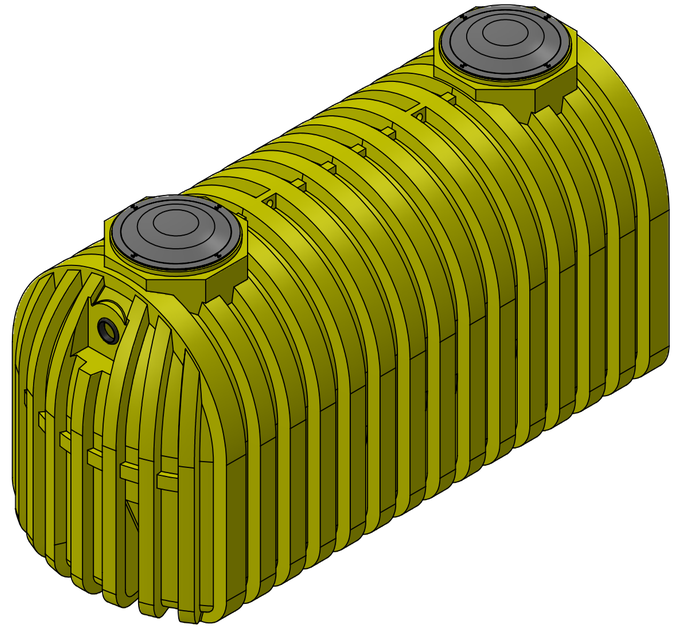

ITEM #	MFGR PART #	DESCRIPTION	QTY
1	87-41758	1500g IC HDPE Septic Tank	1
2	WTL-001-FM	Tank Adapter Ring	2
3	SPL-BR-004	4 Inch Inlet/Outlet Tee	2
4	85-SPL-ER-G	4 Inch Gasket	2
5	85-SPL-001-l	20" Black Domed Lid; SS Screws	2

Complies with FDA standards 21 CFR 177.1520 (1) 3.1 and 3.2
3 year limited warranty

Municipal and County codes may vary from your state approval.
Please make sure you consult with your local sanitation department or plumber on requirements.

UV resistant BPA Free HDPE
Empty weight: 439
Shipping Class: 300
Includes 2 4" tees and gaskets

VPC
VALENCIA PIPE COMPANY

UNLESS OTHERWISE SPECIFIED:
DIMENSIONS ARE IN MILLIMETERS
SURFACE FINISH:
TOLERANCES:
LINEAR:
ANGULAR:

FINISH:

DEBURR AND BREAK SHARP EDGES

DO NOT SCALE DRAWING

REVISION

	NAME	SIGNATURE	DATE
DRAWN			
CHK'D			
APPV'D			
MFG			
Q.A			

MATERIAL:

WEIGHT:

TITLE:
87-41758 1500 GALLON ONE COMPARTMENT HDPE SEPTIC TANK

DWG NO.

A2

SCALE:1:20

SHEET 1 OF 7

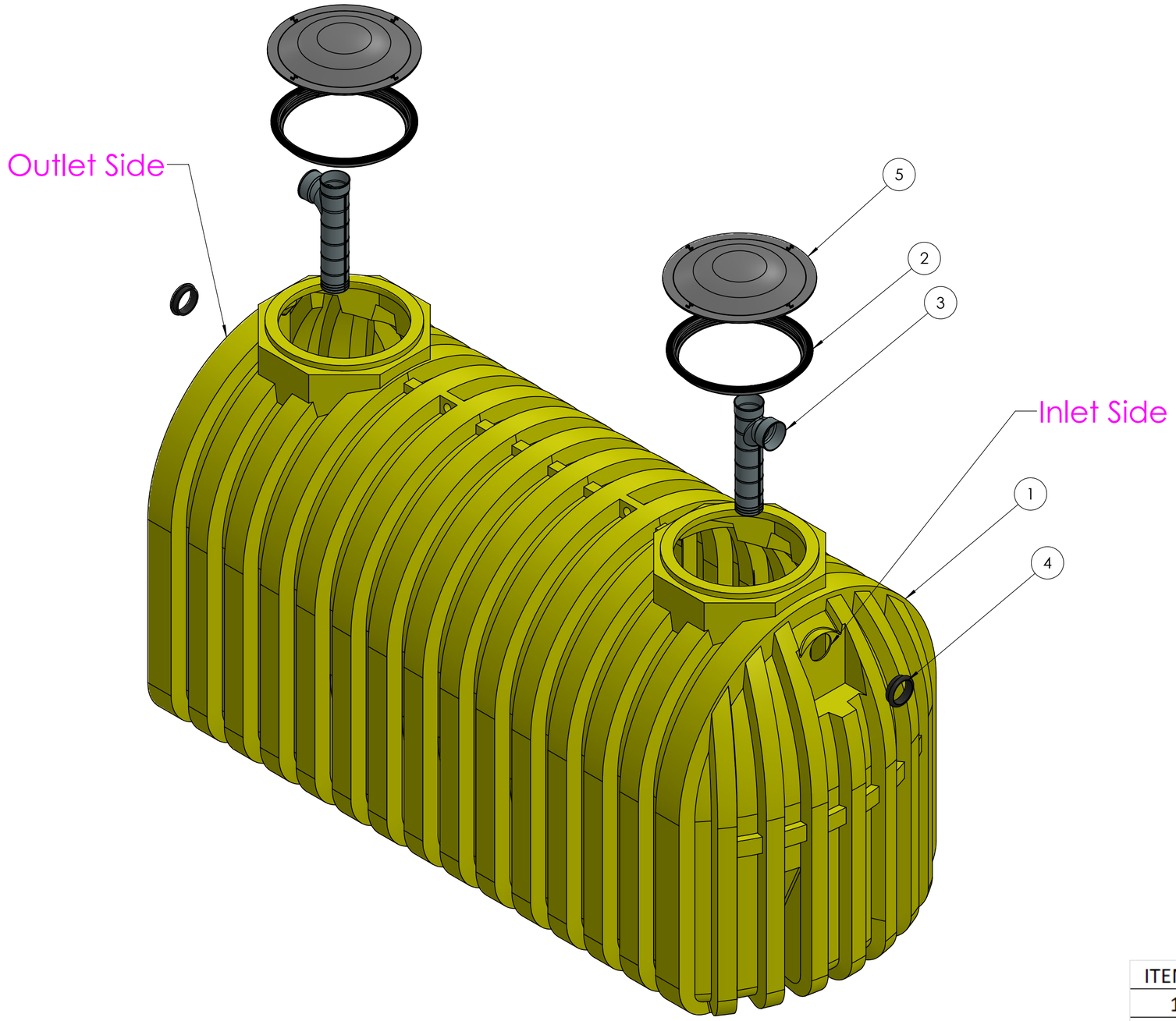

Exploded View

ITEM #	MFGR PART #	DESCRIPTION	QTY
1	87-41758	1500g IC HDPE Septic Tank	1
2	WTL-001-FM	Tank Adapter Ring	2
3	SPL-BR-004	4 Inch Inlet/Outlet Tee	2
4	85-SPL-ER-G	4 Inch Gasket	2
5	85-SPL-001-l	20" Black Domed Lid; SS Screws	2

Complies with FDA standards 21 CFR 177.1520 (1) 3.1 and 3.2
3 year limited warranty

Municipal and County codes may vary from your state approval. Please make sure you consult with your local sanitation department or plumber on requirements.

UV resistant BPA Free HDPE
Empty weight: 439
Shipping Class: 300
Includes 2 4" tees and gaskets

VPC
VALENCIA PIPE COMPANY

UNLESS OTHERWISE SPECIFIED:
DIMENSIONS ARE IN MILLIMETERS
SURFACE FINISH:
TOLERANCES:
LINEAR:
ANGULAR:

FINISH:

DEBURR AND BREAK SHARP EDGES

DO NOT SCALE DRAWING

REVISION

	NAME	SIGNATURE	DATE
DRAWN			
CHK'D			
APPV'D			
MFG			
Q.A			

MATERIAL:

WEIGHT:

TITLE:
87-41758 1500 GALLON ONE COMPARTMENT HDPE SEPTIC TANK

DWG NO.

A2

SCALE:1:13

SHEET 2 OF 7

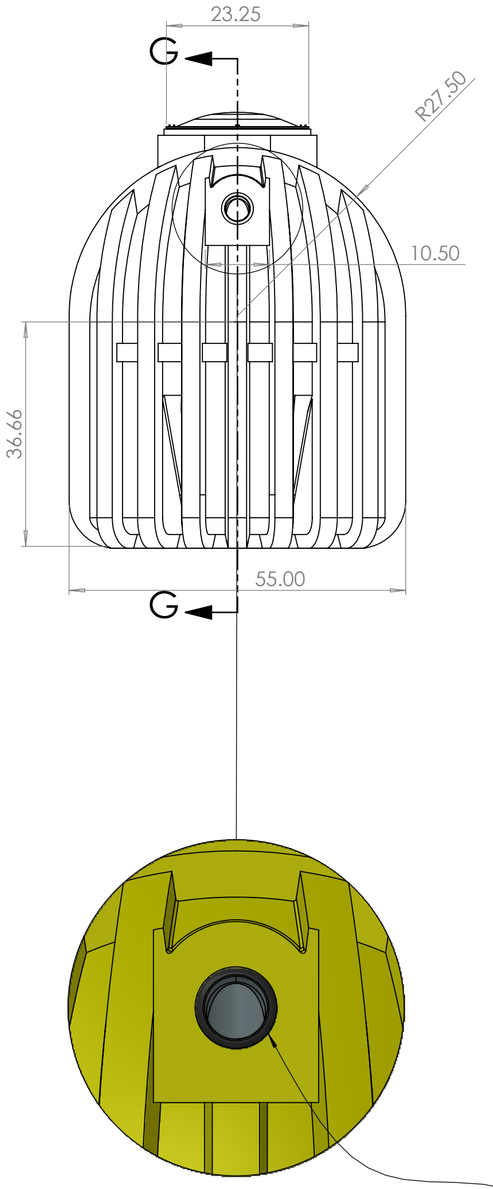

DETAIL K
SCALE 1 : 7

4 " Gasket
(Outlet Side)

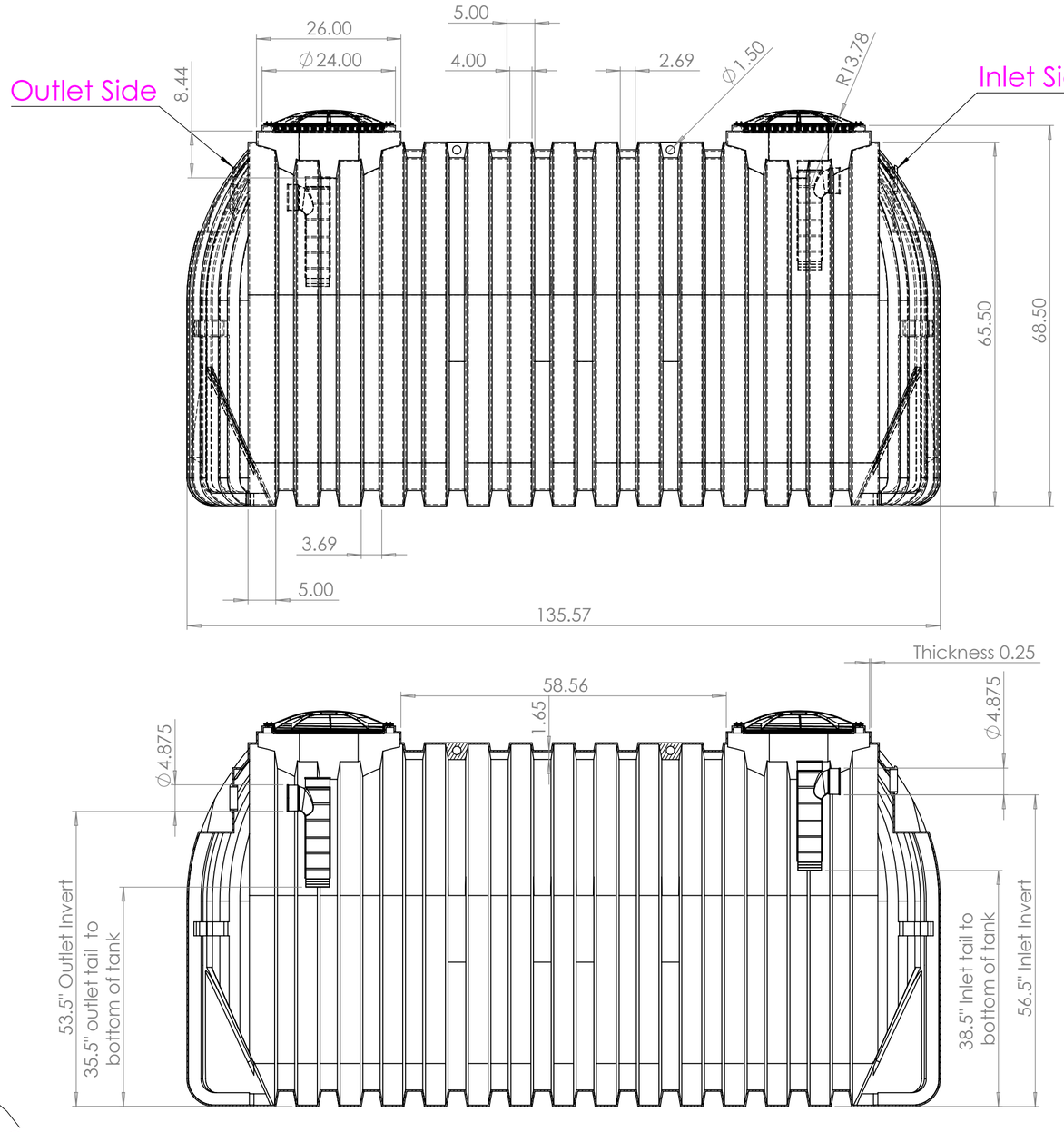

SECTION G-G
SCALE 1 : 18

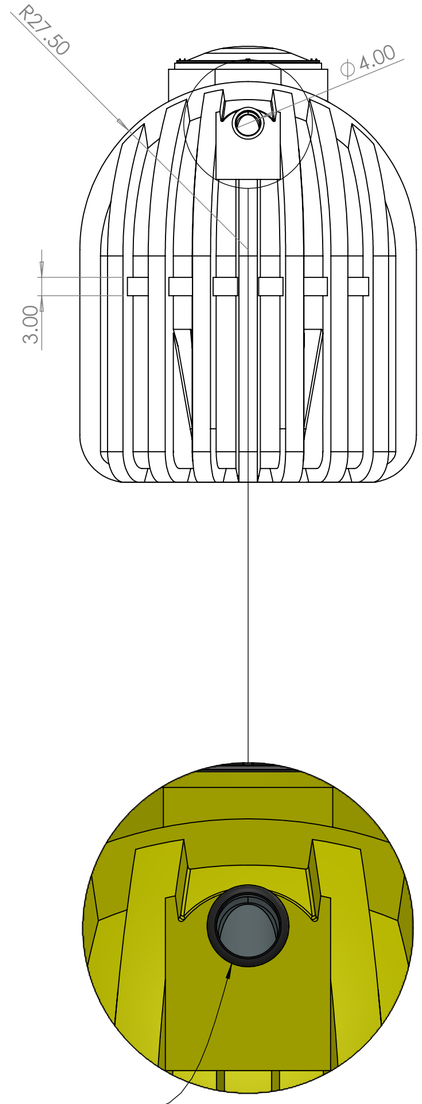

4 " Gasket
(Inlet Side)

DETAIL J
SCALE 1 : 7

Complies with FDA standards 21 CFR 177.1520 (1) 3.1 and 3.2
3 year limited warranty

Municipal and County codes may vary from your state approval. Please make sure you consult with your local sanitation department or plumber on requirements.

UV resistant BPA Free HDPE
Empty weight: 439
Shipping Class: 300
Includes 2 4" tees and gaskets

VPC
VALENCIA PIPE COMPANY

UNLESS OTHERWISE SPECIFIED: DIMENSIONS ARE IN MILLIMETERS SURFACE FINISH: TOLERANCES: LINEAR: ANGULAR:	FINISH:		DEBURR AND BREAK SHARP EDGES	DO NOT SCALE DRAWING	REVISION
	NAME	SIGNATURE	DATE	TITLE: 87-41758 1500 GALLON ONE COMPARTMENT HDPE SEPTIC TANK	
DRAWN					
CHK'D					
APP'V'D					
MFG					
Q.A					
MATERIAL				DWG NO.	A2
WEIGHT:				SCALE:1:20	SHEET 3 OF 7

STATE OF NEW YORK · JOSHUA TRAXLER · 098232 · LICENSED PROFESSIONAL ENGINEER

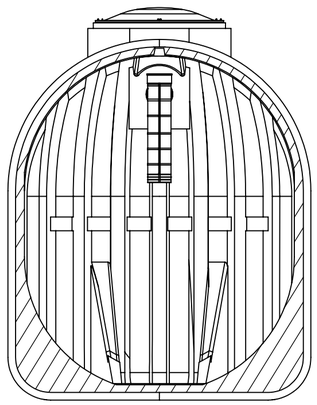

SECTION P-P
Outlet side

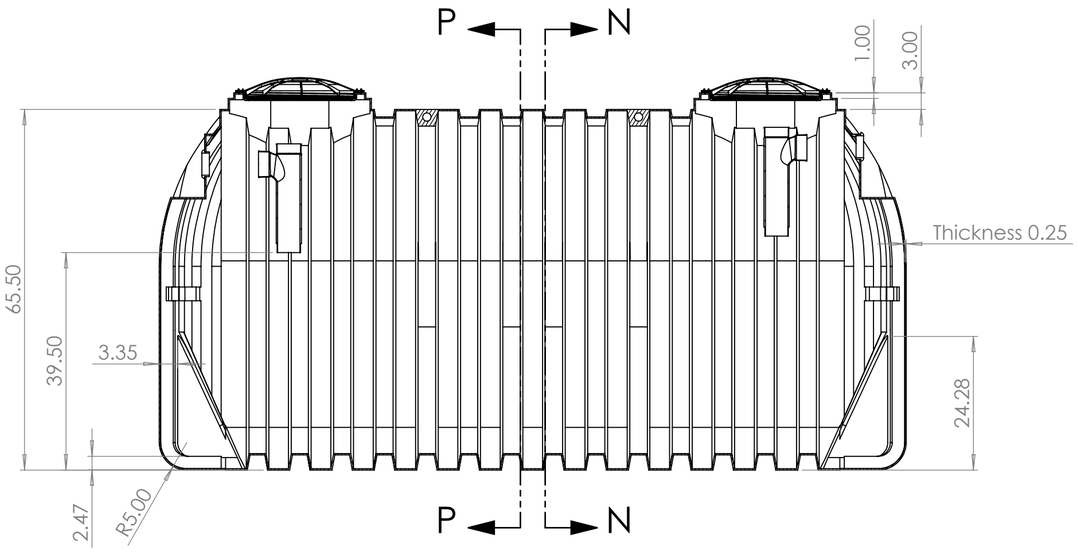

SECTION L-L

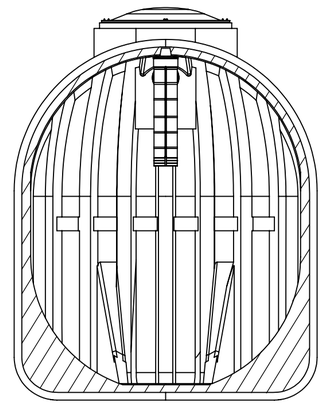

SECTION N-N
Inlet side

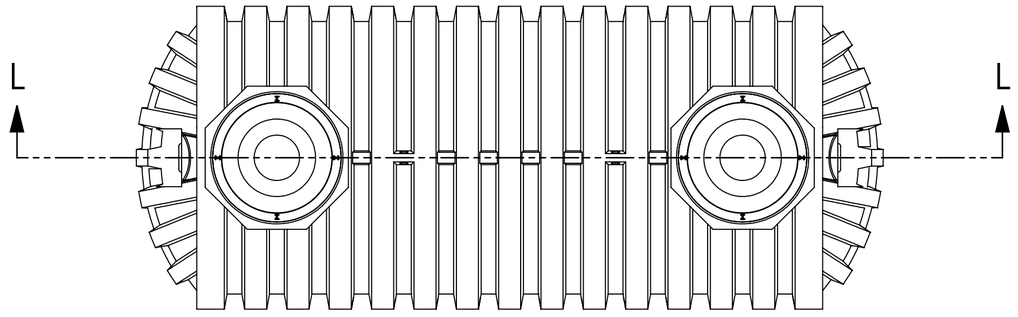

Complies with FDA standards 21 CFR 177.1520 (1) 3.1 and 3.2
3 year limited warranty

Municipal and County codes may vary from your state approval.
Please make sure you consult with your local sanitation department or plumber on requirements.

UV resistant BPA Free HDPE
Empty weight: 439
Shipping Class: 300
Includes 2 4" tees and gaskets

VPC
VALENCIA PIPE COMPANY

UNLESS OTHERWISE SPECIFIED: DIMENSIONS ARE IN MILLIMETERS SURFACE FINISH: TOLERANCES: LINEAR: ANGULAR:	FINISH:		DEBURR AND BREAK SHARP EDGES	DO NOT SCALE DRAWING	REVISION
	NAME	SIGNATURE	DATE	TITLE: 87-41758 1500 GALLON ONE COMPARTMENT HDPE SEPTIC TANK	
DRAWN					
CHK'D					
APPV'D					
MFG					
Q.A				MATERIAL	DWG NO. A2
				WEIGHT:	SCALE:1:20 SHEET 4 OF 7

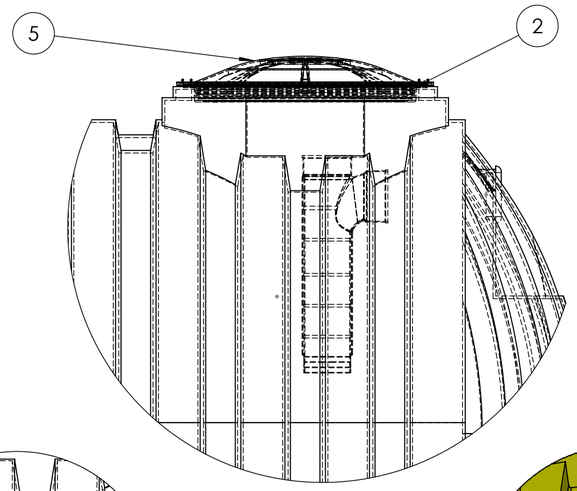

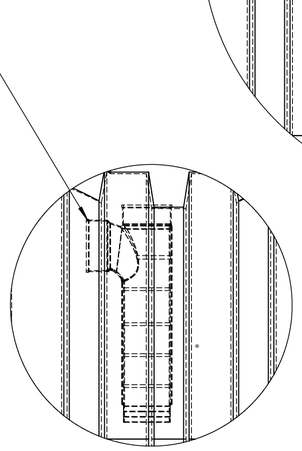

DETAIL B
SCALE 1 : 10

DETAIL C
SCALE 1 : 10

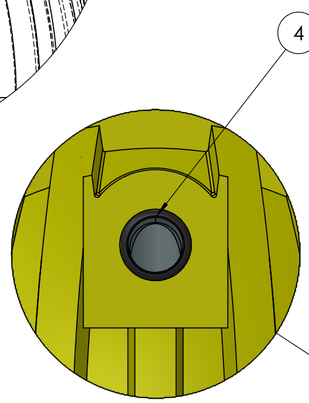

DETAIL F
SCALE 1 : 8

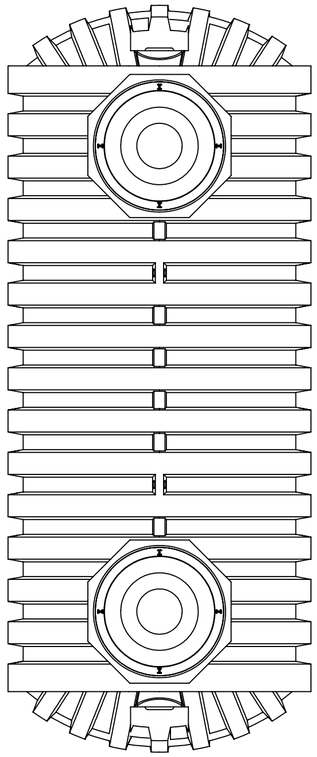

TOP VIEW

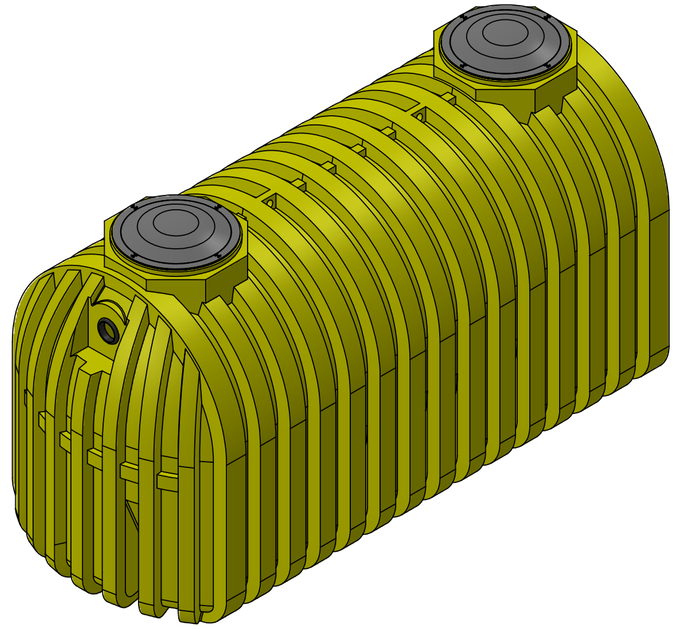

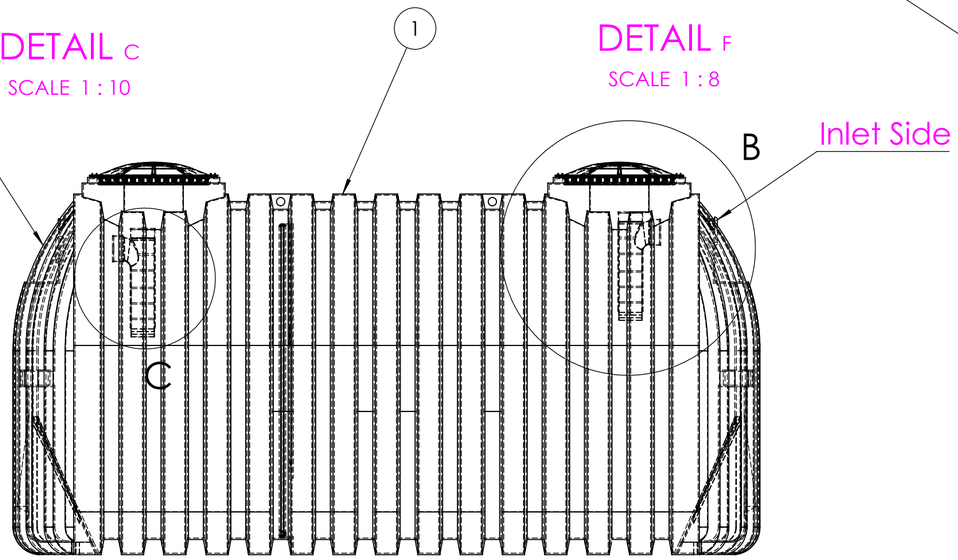

SIDE VIEW

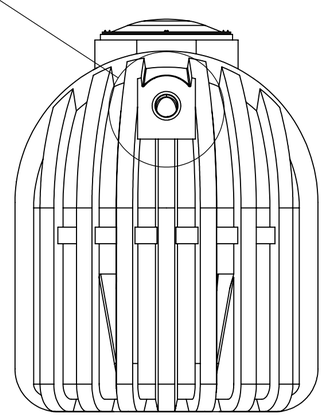

FRONT VIEW

Operating Volume (Glns)
Primary Compartment: 1006
Secondary Compartment: 494

Complies with FDA standards 21 CFR 177.1520 (1) 3.1 and 3.2
3 year limited warranty

Municipal and County codes may vary from your state approval. Please make sure you consult with your local sanitation department or plumber on requirements.

UV resistant BPA Free HDPE
Empty weight: 458
Shipping Class: 300
Includes 2 4" tees and gaskets

VPC
VALENCIA PIPE COMPANY

ITEM #	MFGR PART #	DESCRIPTION	QTY
1	87-41760	1500g 2C HDPE Septic Tank	1
2	WTL-001-FM	Tank Adapter Ring	2
3	SPL-BR-004	4 Inch Inlet/Outlet Tee	2
4	85-SPL-ER-G	4 Inch Gasket	2
5	85-SPL-001-L	20" Black Domed Lid; SS Screws	2

UNLESS OTHERWISE SPECIFIED:
DIMENSIONS ARE IN MILLIMETERS
SURFACE FINISH:
TOLERANCES:
LINEAR:
ANGULAR:

FINISH:

DEBURR AND BREAK SHARP EDGES

DO NOT SCALE DRAWING | REVISION

	NAME	SIGNATURE	DATE
DRAWN			
CHK'D			
APPV'D			
MFG			
Q.A			

MATERIAL:

WEIGHT:

TITLE:
87-41760 1500 GALLON TWO COMPARTMENT HDPE SEPTIC TANK

DWG NO. A2

SCALE:1:20 SHEET 1 OF 7

STATE OF NEW YORK · SYRACUSE LIBRARIAN · LICENSED PROFESSIONAL ENGINEER · 998232

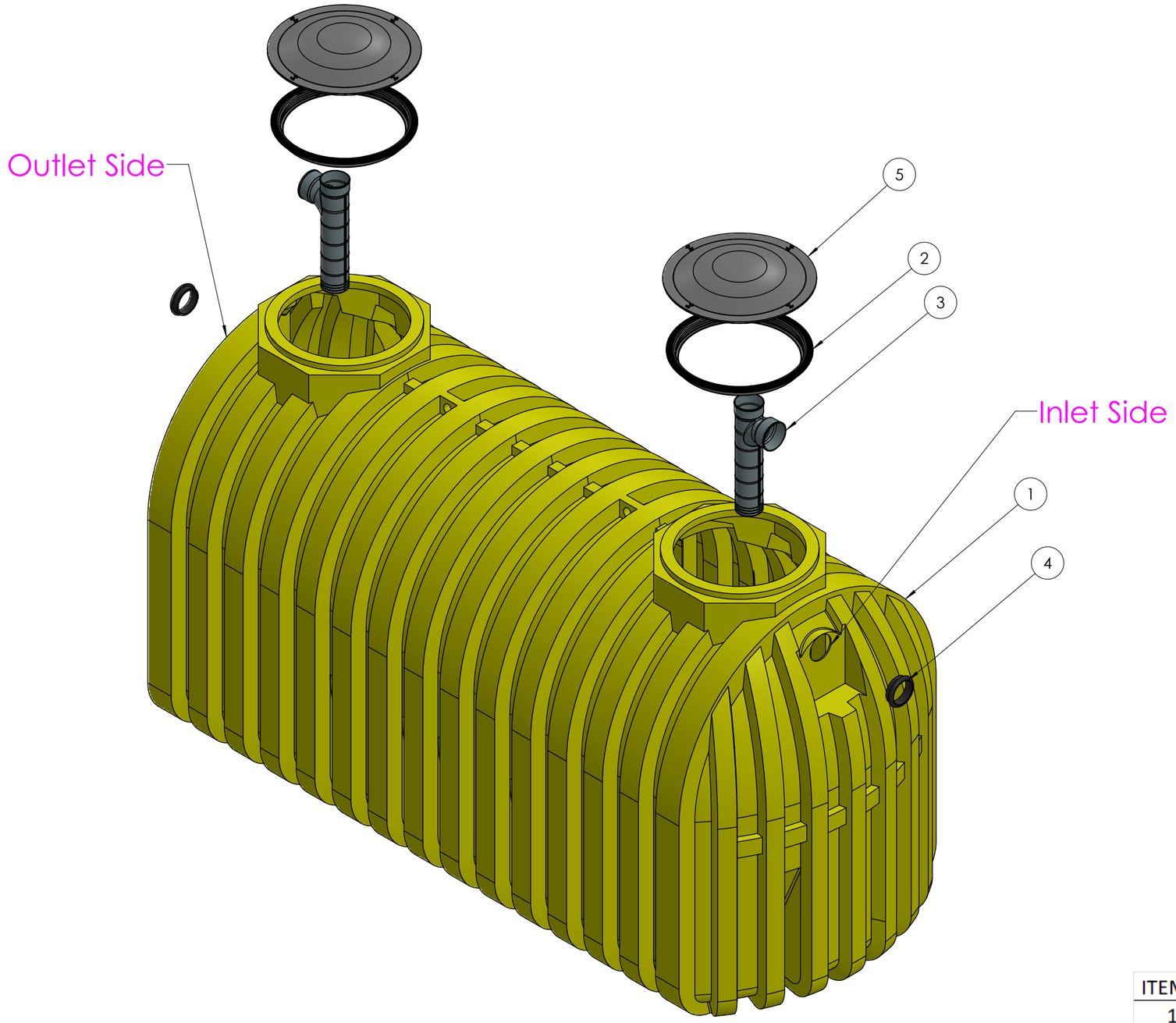

Exploded View

ITEM #	MFGR PART #	DESCRIPTION	QTY
1	87-41760	1500g 2C HDPE Septic Tank	1
2	WTL-001-FM	Tank Adapter Ring	2
3	SPL-BR-004	4 Inch Inlet/Outlet Tee	2
4	85-SPL-ER-G	4 Inch Gasket	2
5	85-SPL-001-L	20" Black Domed Lid; SS Screws	2

Operating Volume (Glns)
Primary Compartment: 1006
Secondary Compartment: 494

Complies with FDA standards 21 CFR 177.1520 (1) 3.1 and 3.2
3 year limited warranty

Municipal and County codes may vary from your state approval. Please make sure you consult with your local sanitation department or plumber on requirements.

UV resistant BPA Free HDPE
Empty weight: 458
Shipping Class: 300
Includes 2 4" tees and gaskets

VPC
VALENCIA PIPE COMPANY

UNLESS OTHERWISE SPECIFIED: DIMENSIONS ARE IN MILLIMETERS SURFACE FINISH: TOLERANCES: LINEAR: ANGULAR:	FINISH:		DEBURR AND BREAK SHARP EDGES	DO NOT SCALE DRAWING	REVISION
	NAME	SIGNATURE	DATE	TITLE: 87-41760 1500 GALLON TWO COMPARTMENT HDPE SEPTIC TANK	
DRAWN					
CHK'D					
APPV'D					
MFG					
Q.A					
				MATERIAL:	DWG NO. A2
				WEIGHT:	SCALE:1:20 SHEET 2 OF 7

STATE OF NEW YORK THOMAS GRAHAM 098232 LICENSED PROFESSIONAL ENGINEER

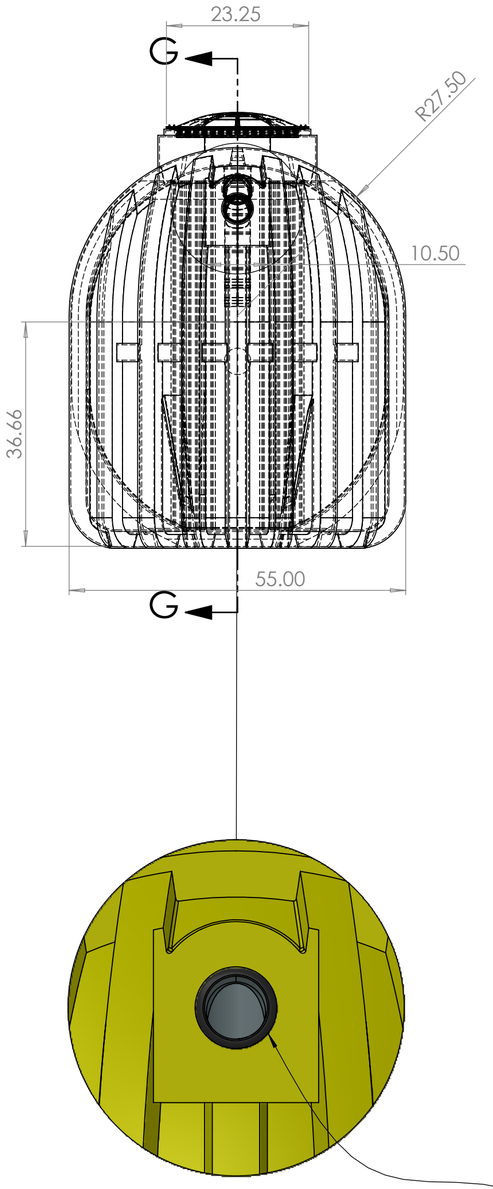

DETAIL K

SCALE 1 : 7

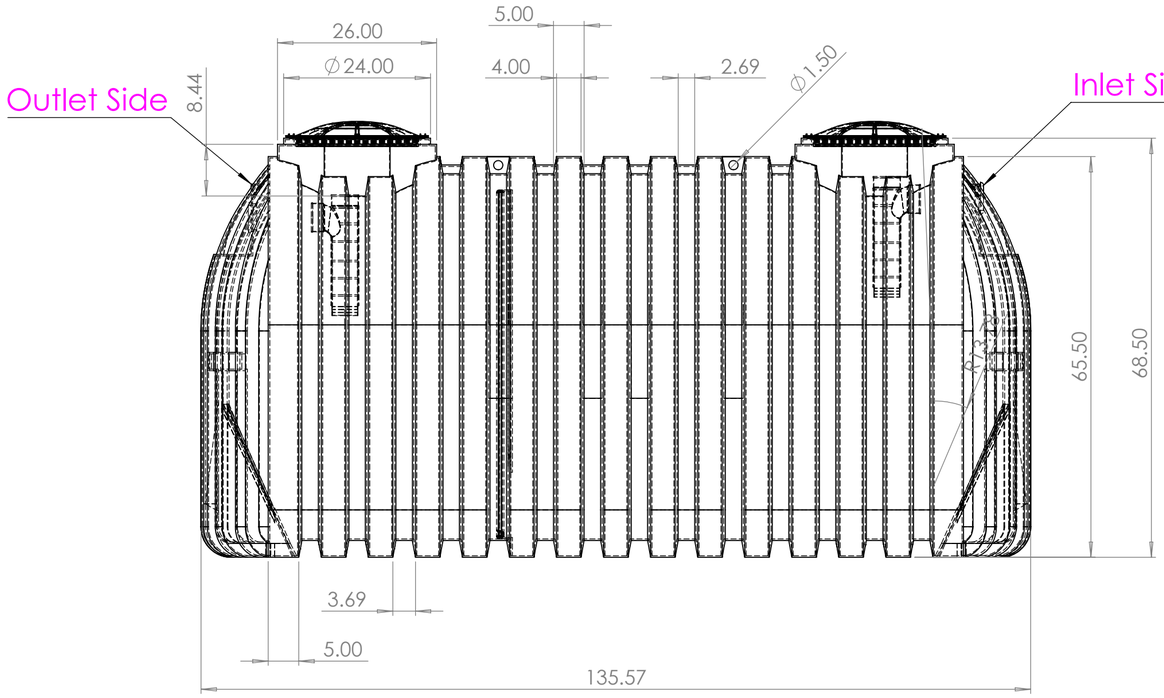

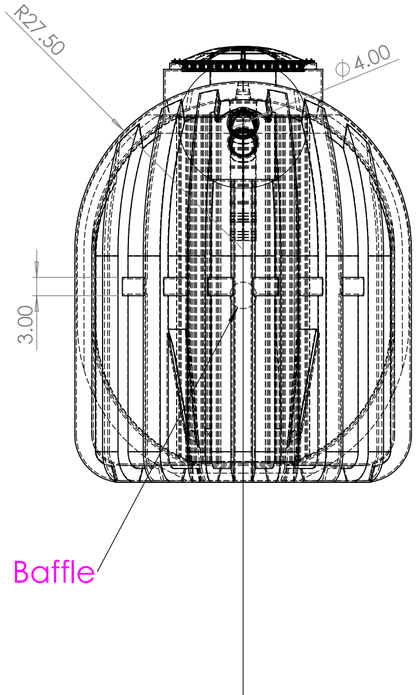

4 " Gasket
(Outlet Side)

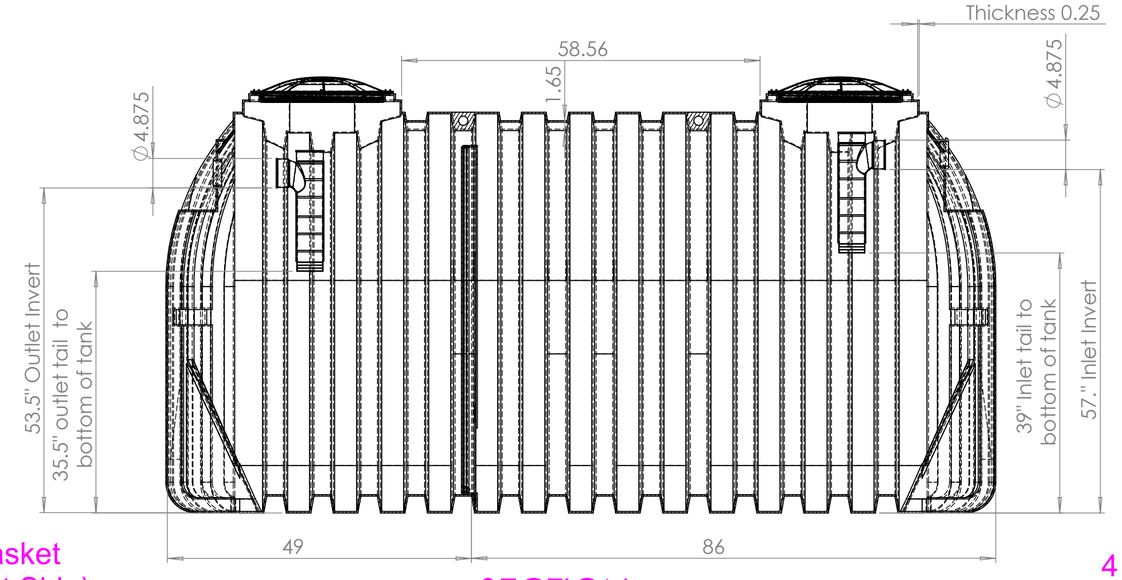

SECTION G-G

SCALE 1 : 18

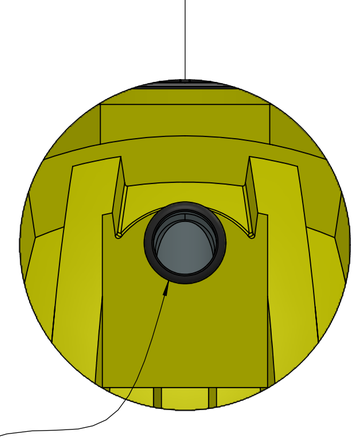

4 " Gasket
(Inlet Side)

DETAIL J

SCALE 1 : 7

Operating Volume (Glns)
Primary Compartment: 1006
Secondary Compartment: 494

Complies with FDA standards 21 CFR 177.1520 (1) 3.1 and 3.2
3 year limited warranty

Municipal and County codes may vary from your state approval. Please make sure you consult with your local sanitation department or plumber on requirements.

UV resistant BPA Free HDPE
Empty weight: 458
Shipping Class: 300
Includes 2 4" tees and gaskets

VPC
VALENCIA PIPE COMPANY

UNLESS OTHERWISE SPECIFIED: DIMENSIONS ARE IN MILLIMETERS SURFACE FINISH: TOLERANCES: LINEAR: ANGULAR:	FINISH:		DEBURR AND BREAK SHARP EDGES	DO NOT SCALE DRAWING	REVISION
	NAME	SIGNATURE	DATE	TITLE: 87-41760 1500 GALLON TWO COMPARTMENT HDPE SEPTIC TANK	
DRAWN					
CHK'D					
APPV'D					
MFG					
Q.A					
MATERIAL:				DWG NO.	A2
WEIGHT:				SCALE:1:20	SHEET 3 OF 7

STATE OF NEW YORK · LICENSED PROFESSIONAL ENGINEER

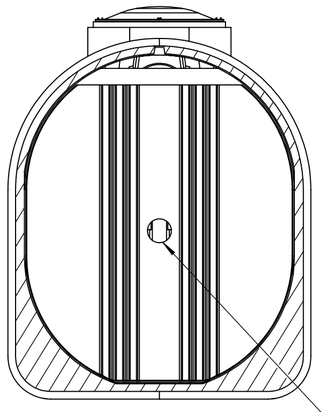

SECTION P-P
Outlet side

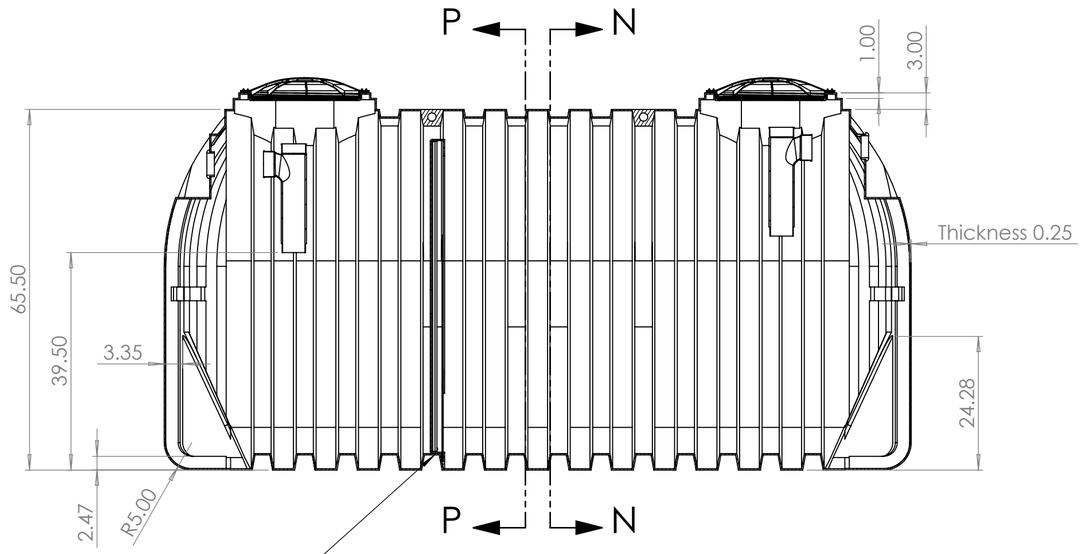

SECTION L-L

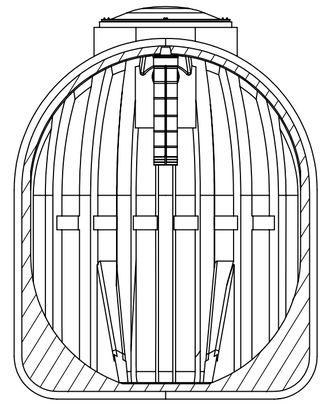

SECTION N-N
Inlet side

Baffle 4 inch
Dia

Baffle placement:
86" from side wall to baffle on 2/3 (inlet) side;
49" from side wall to baffle on 1/3 (outle) side.
59.8" tall x 54.3" wide x 2.6" deep.

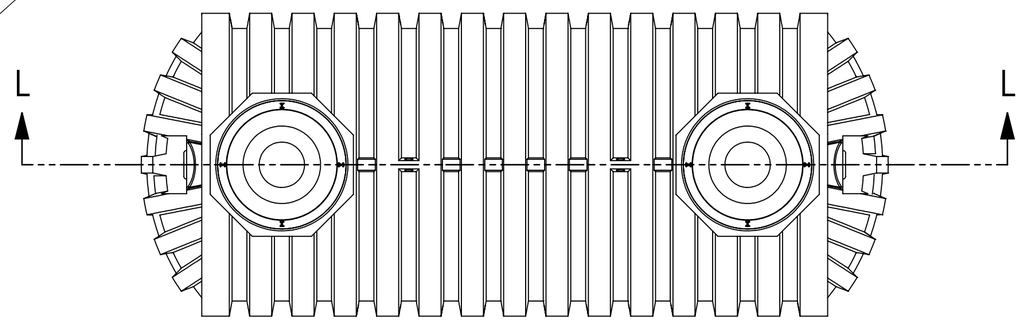

Operating Volume (Glns)
Primary Compartment: 1006
Secondary Compartment: 494

Complies with FDA standards 21 CFR 177.1520 (1) 3.1 and 3.2
3 year limited warranty

Municipal and County codes may vary from your state approval.
Please make sure you consult with your local sanitation department or plumber on requirements.

UV resistant BPA Free HDPE
Empty weight: 458
Shipping Class: 300
Includes 2 4" tees and gaskets

VALENCIA PIPE COMPANY

UNLESS OTHERWISE SPECIFIED: DIMENSIONS ARE IN MILLIMETERS SURFACE FINISH: TOLERANCES: LINEAR: ANGULAR:	FINISH:		DEBURR AND BREAK SHARP EDGES	DO NOT SCALE DRAWING	REVISION
	NAME	SIGNATURE	DATE	TITLE: 87-41760 1500 GALLON TWO COMPARTMENT HDPE SEPTIC TANK	
DRAWN					
CHK'D					
APP'V'D					
MFG					
Q.A					
MATERIAL:				DWG NO.	A2
WEIGHT:				SCALE:1:20	SHEET 4 OF 7

STATE OF NEW YORK
VICTORIA IBRAHIM
898232
LICENSED PROFESSIONAL ENGINEER